Tiandy

TC-C35XS Spec:I3/E/Y/C/H/2.8mm/V4.0

5MP Fixed IR Turret Camera

Lite Series

KEY FEATURES

- Metal+plastic housing
- Up to 5MP,2592×1944@20fps
- S+265/H.265/H.264B/H.264M/H.264H
- Color:0.002Lux@(F1.6,AGC ON),B/W:0Lux with IR
- IR range up to 30m
- Built-in Mic
- Support microSD/microSDHC/microSDXC card,up to 512GB
- Operating conditions -40°C~65°C(-40°F~149°F), ≤95%RH
- DC12V±25%,Max. 6.5W, PoE:IEEE 802.3af,Max. 7W
- IP66

Tiandy Technologies Co.,Ltd Tiandy Overseas Tiandy @tiandyofficial

Tiandy Technologies Co.,Ltd.
Email: sales@tiandy.com Tel: +86-22-58596065
Website: en.tiandy.com Fax: +86-22-58596048

2024.06.24

Tiandy

SPECIFICATIONS

Camera	
Image Sensor	1/2.8"CMOS
Min. Illumination	Color:0.002Lux@(F1.6,AGC ON),B/W:0Lux with IR
Shutter Time	1s~1/100000s
Day&Night	IR-cut filter with auto switch (ICR)
Smart IR	Yes
WDR	120dB
S/N	>42dB
Angle Adjustment	0~340°(P); 0~75°(T); 0~360°(R)
Lens	
Lens Type	Fixed focal lens
Focal Length	2.8mm
Lens Mount	M12
Aperture Range	F1.6
Aperture Type	Fixed
Field of View	94.7°(H); 52.5°(V); 118.5°(D)
DORI Distance	Detect:56.0m Observe:22.2m Recognize:11.2m Identify:5.6m
Illuminator	
IR LEDs	2
IR Distance	Up to 30m
Wavelength	850nm
Compression Standard	
Video Compression	S+265/H.265/H.264B/H.264M/H.264H
Video Bit Rate	32k~6Mbps
Audio Compression	G.711A/G.711U/ADPCM_D
Audio Sampling Rate	8kHz/32kHz/48kHz
Image	
Max. Resolution	5MP,2592×1944@20fps
Main Stream	PAL:20fps(2592×1944), 25fps(2592×1520, 2560×1440, 2304×1296, 1920×1080, 1280×720) NTSC:20fps(2592×1944), 24fps(2592×1520, 2560×1440), 30fps(2304×1296, 1920×1080, 1280×720)
Sub Stream	PAL:25fps(704×576, 704×288, 640×360, 352×288) NTSC:30fps(704×480, 704×240, 640×360, 352×240)
BLC	Yes
HLC	Yes
AGC	Yes
3D DNR	Yes
White Balance	Auto/Semi-Auto/Manual/Sunshine/Nature Light/Warmlight Lamp/Daylight Lamp/Filament Lamp/Lock White Balance

Tiandy

OSD	Overlay of additional characters in 1 regions, 1 line, with a maximum of 48 characters or 16 Chinese characters per region; 16*16/32*32/48*48/64*64
Privacy Mask	4 black static areas
Defog	Yes
Feature	
General Alarm	Motion Detection; Mask Alarm; Alarm Input
Exceptions Alarm	Disk Full; Disk R/W Error; IP Address Conflict
Linkage Method	Trigger Recording; Trigger Capture; Notify Surveillance Center; Alarm Output
Video Analytics	Tripwire; Perimeter
Rules of Behavior Analyse In 1 Scene	2
Network	
ANR	Yes
Protocols	HTTP; HTTPS; TCP/IP; UDP; UPnP; ICMP; DHCP; DNS; DDNS; Easy DDNS; NTP; TLS v1.2; QoS; IPv4; SSH; Unicast; ARP; FTP
System Compatibility	P2P(Mutually exclusive with Profile G); ONVIF(Profile S/T/G) ; SDK; CGI; Milestone; RTSP
Remote Connection	≤2
Client	Easy7 VMS
Moblie Client	EasyLive Plus
Web	IE10+; Firefox52+; Edge89+; Safari11+; Chrome57+
Interface	
Communication Interface	1*RJ-45 (10/100 Base-T)
Audio I/O	1; 1
Alarm I/O	1-ch,TTL input,3mA,3.3VDC; 1-ch,TTL output,30mA,12VDC
Built-in Mic	Yes
Reset Button	Yes(Built-in)
On-board Storage	Support microSD/microSDHC/microSDXC card,up to 512GB
RTC	Yes
General	
Web Client Language	19 languages Simple Chinese/Traditional Chinese/English/Spanish/Korean/Italian/Turkish/Russian/Thai/French/Polish/Dutch/Hebrew/Arabic/Vietnamese/German/Ukrainian/Portuguese/Albanian
Operating Temperature	-40°C~65°C(-40°F~149°F)
Operating Humidity	≤95%RH
Storage Temperature	-40°C~65°C(-40°F~149°F)
Storage Humidity	10%~95%RH(non-condensing)
Power Supply	DC12V±25%,Max. 6.5W; PoE:IEEE 802.3af,Max. 7W
Protection	Surge4000V; ESD6000V; IP66
Boundary Dimensions	117(L)117(W)96(H)mm
Package Dimensions	140(L)140(W)120(H)mm
GrossWeight	0.53kg

Tiandy

DIMENSIONS (Unit: mm)

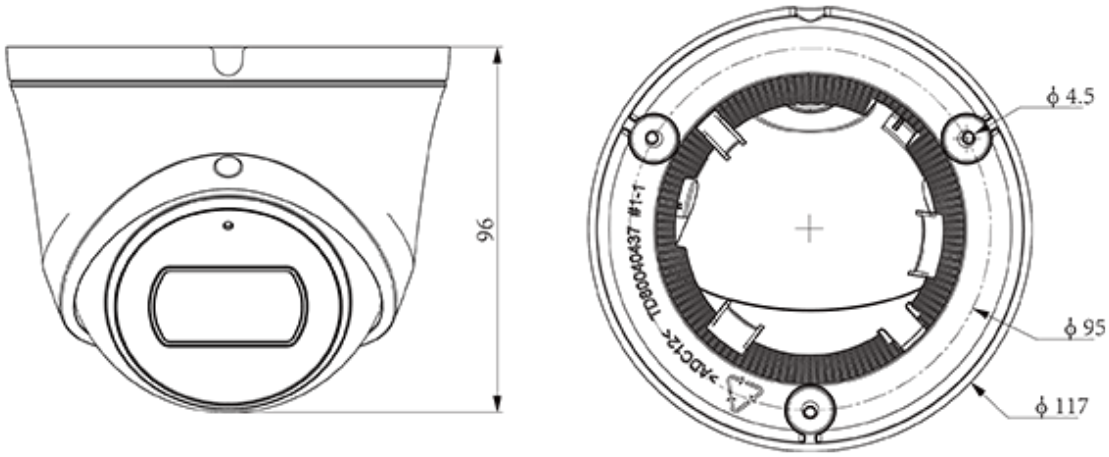

Assembly diagram of Junction Box

TC-P54BM Spec:V5

A36

A29