Tiandy

TC-C348V 4LHA-4

Bullet Camera

LK

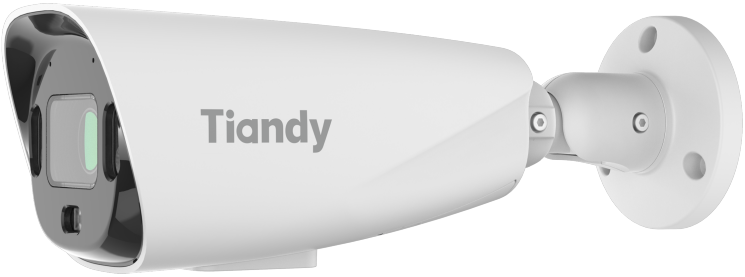

KEY FEATURES

- Metal housing
- Up to 4MP,2688×1520@30fps
- S+265/H.265/H.264B/H.264M/H.264H/Motion JPEG
- Color:0.0001Lux@(F1.0,AGC ON),B/W:0Lux with IR
- 1×Built-in Mic, 1×Built-in Speaker
- Support microSD/microSDHC/microSDXC card,up to 1TB
- Support smart surveillance, face capture
- Support human/vehicle/non-motor vehicle/pet(cat、dog) classification
- Operating conditions -35°C~65°C(-31°F~149°F), ≤95%RH
- DC12V±25%,Max. 17W, PoE:IEEE 802.3at,Max. 21W
- IP67, IK10

Tiandy Technologies Co.,Ltd Tiandy Overseas Tiandy @tiandyofficial

Tiandy Technologies Co.,Ltd.
Email: sales@tiandy.com Tel: +86-22-58596065
Website: en.tiandy.com Fax: +86-22-58596048

2026.03.20

Tiandy

SPECIFICATIONS

Camera	
Image Sensor	1/1.8"CMOS
Min. Illumination	Color:0.0001Lux@(F1.0,AGC ON),B/W:0Lux with IR
Shutter Time	1s~1/100000s
Day&Night	Fixed IR-cut
WDR	130dB,True WDR(TWDR)
S/N	>56dB
Angle Adjustment	0~360°(P); 0~90°(T); 0~360°(R)
Lens	
Lens Type	Fixed focal lens
Focal Length	4mm
Lens Mount	M16
Aperture Range	F1.0
Aperture Type	Fixed
Field of View	88.4°(H); 51.5°(V); 99.5°(D)
DORI Distance	Detect:55m Observe:21.5m Recognize:11m Identify:5.5m
Illuminator	
White LEDs	4
Whitelight Distance	30m
Red and Blue Alarm Flash	Red and Blue Light
Compression Standard	
Video Compression	S+265/H.265/H.264B/H.264M/H.264H/Motion JPEG
Video Bit Rate	32k~16Mbps
Audio Compression	G.711A/G.711U/ADPCM_D/AAC_LC
Audio Sampling Rate	8kHz/32kHz/48kHz
Image	
Max. Resolution	4MP,2688×1520@30fps
Main Stream	PAL:25fps(2688×1520, 2560×1440, 2304×1296)50fps(1920×1080, 1280×720) NTSC:30fps(2688×1520, 2560×1440, 2304×1296)60fps(1920×1080, 1280×720)
Sub Stream	PAL:25fps(704×576, 704×288, 640×360, 352×288) NTSC:30fps(704×480, 704×240, 640×360, 352×240)
Third Stream	PAL:25fps(1280x720,704x576,704x288,352x288, 640×480) NTSC:30fps(1280x720,704x480,704x240,352x240, 640×480)
Fourth Stream	PAL:25fps(1280x720,704x576) NTSC:30fps(1280x720,704x480)

Tiandy

Fifth Stream	PAL:25fps(704x576) NTSC:30fps(704x480)
BLC	Yes
HLC	Yes
LDC	Yes
AGC	Yes
3D DNR	Yes
White Balance	Auto/Semi-Auto/Manual/Sunshine/Nature Light/Warmlight Lamp/Daylight Lamp/Filament Lamp/Lock White Balance
ROI	8 rectangular static areas
Corridor Mode	Yes
OSD	Overlay of additional characters in 5 regions,2 line, with a maximum of 127 characters or 42 Chinese characters per region; 16*16/24*24/32*32/48*48/64*64/96*96,Default Adaptive; Vector/Lattice
Picture Overlay	1*200x200 size BMP 24 color bit image overlay
Privacy Mask	4 black static areas
Defog	Yes
Feature	
AI ISP	Yes
General Alarm	Motion Detection; Mask Alarm; Alarm Input
Exceptions Alarm	Voltage Alarm; Disk Full; Disk R/W Error; IP Address Conflict; MAC Address Conflict; FTP Server Exception ; Network Disconnection; No Disk; Illegal Access
Linkage Method	Send Email; Trigger Sound; Trigger Recording; Trigger Capture; Notify Surveillance Center; Alarm Output; Trigger red and blue light ; Trigger smart light
Video Analytics	Human/Vehicle/Non-motor Vehicle/Pet(Cat、Dog) Classification; Tripwire; Double Tripwire; Perimeter; Object Abandon; Object Missing; Heatmap; Loitering; Running; Parking; People Counting; Crowed Detection; Safety Helmet Detection; On Duty Detection; Video Abnormal; Audio Abnormal
Rules of Behavior Analyse In 1 Scene	8
Early Warning(EW)	Early Warning(EW)
Face Detection Performance	Detect up to 32 faces at the same scene; Capture up to 16 faces at the same scene
False Rate of Face Capture	≤1%
Face Duplicate Capture Rate	≤20%（Continuous 10-person scene and below）
Mask Attribute Linkage Alarm	Mask Attribute Linkage Alarm
Face-Person Binding	Binding rate≥90%（Continuous 6-person scene and below）
Smart Event	Fire Exit Occupancy
Image Push Strategy	Image Push Strategy
Image Push Interval	Image Push Interval
Capture Mode	Capture Mode
Face Capture	Face Capture
Background Image Resolution	2688×1520

Tiandy

Background Image OSD Overlay	video streamOSD/customize
Human Capture Rate	⩾95%（Continuous 6-person scene and below）
Human False Capture Rate	⩽7%（Continuous 6-person scene and below）
Human Duplicate Capture Rate	⩽30%（Continuous 6-person scene and below）
Visible Light Smoke & Fire Detection	Visible Light Smoke & Fire Detection
Network	
ANR	Yes
Protocols	RTSP; RTMP; HTTP; HTTPS; TCP; UDP; UPnP; ICMP; IGMP; SNMP v1\v2\v3; DHCP; DNS; DDNS; Easy DDNS; NTP; SMTP; TLS v1.2; SSL; 802.1X; QoS; IPv4; IPv6; PPPoE; SSH; Unicast; Multicast; RTCP; ARP; SRTP; FTP; SFTP; NAS
System Compatibility	ONVIF(Profile S/T/G/M) ; SDK; CGI; Milestone
Remote Connection	Up to 7 channels
Client	Easy7 VMS
Mobile Client	EasyLive Plus
Web	IE10+; Firefox52+; Edge89+; Safari11+; Chrome57+
Interface	
Communication Interface	1×RJ-45 (10/100 Base-T)
Audio I/O	1×input, two-core , max. input amplitude:3.3 Vpp, input impedance:1 KΩ, interface type:non-equilibrium; 1×output, two-core, max. output amplitude:3.3 Vpp, output impedance:100 Ω, interface type: non-equilibrium
Alarm I/O	2×input,TTL,3mA,3.3VDC; 1×output,relay,1A,24VDC
Built-in Mic	1×Built-in Mic
Built-in Speaker	1×Built-in Speaker
Reset Button	Yes
On-board Storage	Support microSD/microSDHC/microSDXC card,up to 1TB
RTC	Yes
Additional Interfaces	RS-485
General	
Web Client Language	20 languages Simple Chinese/Traditional Chinese/English/Spanish/Korean/Italian/Turkish/Russian/Thai/French/Polish/Dutch/Hebrew/Arabic/Vietnamese/German/Ukrainian/Portuguese/Albanian/Greek
Operating Temperature	-35°C~65°C(-31°F~149°F)
Operating Humidity	⩽95%RH
Storage Temperature	-40°C~65°C(-40°F~149°F)
Storage Humidity	10%~95%RH(non-condensing)
Power Supply	DC12V±25%,Max. 17W; PoE:IEEE 802.3at,Max. 21W
Protection	Surge4000V; ESD6000V; IP67; IK10
Boundary Dimensions	282(L)105(W)95(H)mm
Package Dimensions	360(L)150(W)175(H)mm

GrossWeight	1.61kg
NetWeight	1.33kg

DIMENSIONS (Unit: mm)

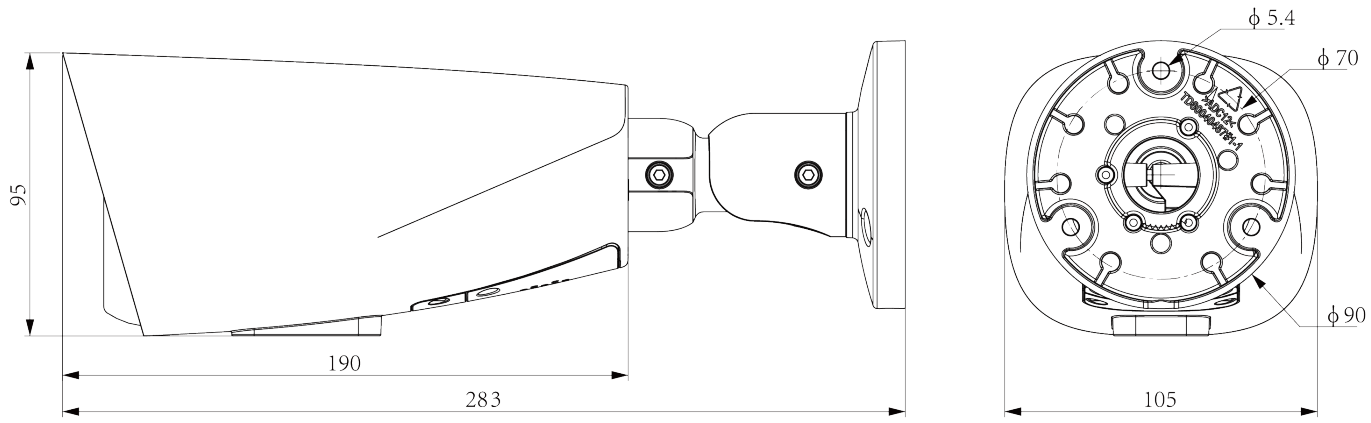

Tiandy

Assembly diagram of Junction Box

TC-P54BM SPEC: V5
JUNCTION BOX

A36
POLE MOUNT