Tiandy

TC-C32RN Spec:I5/E/Y/QX/2.8mm/V4.2

Bullet Camera

Spark Series

KEY FEATURES

- Plastic housing
- Up to 2MP,1920×1080@30fps
- S+265/H.265/H.264B/H.264M/H.264H
- Color:0.02Lux@(F1.6,AGC ON),B/W:0Lux with IR
- IR range up to 50m
- 1×Built-in Mic
- Operating conditions -30°C~60°C(-22°F~140°F), ≤95%RH
- DC12V±25%,Max. 7.5W, PoE:IEEE 802.3af,Max. 8.5W
- IP67

Tiandy Technologies Co.,Ltd
Tiandy Overseas
Tiandy
@tiandyofficial

Tiandy Technologies Co.,Ltd.
Email: sales@tiandy.com
Tel: +86-22-58596065
Website: en.tiandy.com
Fax: +86-22-58596048

2025.12.02

Tiandy

SPECIFICATIONS

Camera	
Image Sensor	1/3"CMOS
Min. Illumination	Color:0.02Lux@(F1.6,AGC ON),B/W:0Lux with IR
Shutter Time	1s~1/100000s
Day&Night	IR-cut filter with auto switch (ICR)
Smart IR	Yes
WDR	DWDR
S/N	>36dB
Angle Adjustment	0~350°(P); 0~90°(T); 0~360°(R)
Lens	
Lens Type	Fixed focal lens
Focal Length	2.8mm
Lens Mount	M12
Aperture Range	F1.6
Aperture Type	Fixed
Field of View	92.8°(H); 52.2°(V); 106.5°(D)
DORI Distance	Detect:42.26m Observe:16.77m Recognize:8.45m Identify:4.23m
Illuminator	
IR LEDs	6
IR Distance	Up to 50m
Wavelength	850nm
Compression Standard	
Video Compression	S+265/H.265/H.264B/H.264M/H.264H
Video Bit Rate	32k~4Mbps
Audio Compression	G.711A/G.711U
Audio Sampling Rate	8kHz/16kHz
Image	
Max. Resolution	2MP,1920×1080@30fps
Main Stream	PAL:25fps(1920×1080, 1280×720, 640×480, 704×576) NTSC:30fps(1920×1080, 1280×720, 640×480, 704×480)
Sub Stream	PAL:25fps(704×576, 704×288, 640×360, 352×288) NTSC:30fps(704×480, 704×240, 640×360, 352×240)
BLC	Yes
HLC	Yes
AGC	Yes

Tiandy

3D DNR	Yes
White Balance	Auto/Semi-Auto/Manual/Sunshine/Nature Light/Warmlight Lamp/Daylight Lamp/Filament Lamp/Lock White Balance
OSD	Overlay of additional characters in 1 regions, 1 line, with a maximum of 48 characters or 16 Chinese characters per region; 16*16/32*32/48*48; Lattice
Privacy Mask	4 black static areas
Defog	Yes
Feature	
General Alarm	Motion Detection
Exceptions Alarm	IP Address Conflict
Linkage Method	Trigger Capture
Network	
Protocols	RTSP; HTTP; TCP; UDP; ICMP; DHCP; DNS; NTP; TLS v1.2; IPv4; SSH; Unicast; FTP
System Compatibility	P2P(Mutually exclusive with Onvif); ONVIF(Profile S/T) ; SDK; CGI; Milestone
Remote Connection	≤2
Client	Easy7 VMS
Mobile Client	EasyLive Plus
Web	IE10+; Firefox52+; Edge89+; Safari11+; Chrome57+
Interface	
Communication Interface	1×RJ-45 (10/100 Base-T)
Built-in Mic	1×Built-in Mic
General	
Web Client Language	18 languages Simple Chinese/Traditional Chinese/English/Spanish/Korean/Italian/Turkish/Russian/Thai/French/Polish/Dutch/Hebrew/Arabic/Vietnamese/German/Ukrainian/Portuguese
Operating Temperature	-30°C~60°C(-22°F~140°F)
Operating Humidity	≤95%RH
Storage Temperature	-30°C~60°C(-22°F~140°F)
Storage Humidity	10%~95%RH(non-condensing)
Power Supply	DC12V±25%,Max. 7.5W; PoE:IEEE 802.3af,Max. 8.5W
Protection	Surge4000V; ESD6000V; IP67
Boundary Dimensions	133(L)260(W)140(H)mm
Package Dimensions	315(L)145(W)140(H)mm
GrossWeight	0.87kg

Tiandy
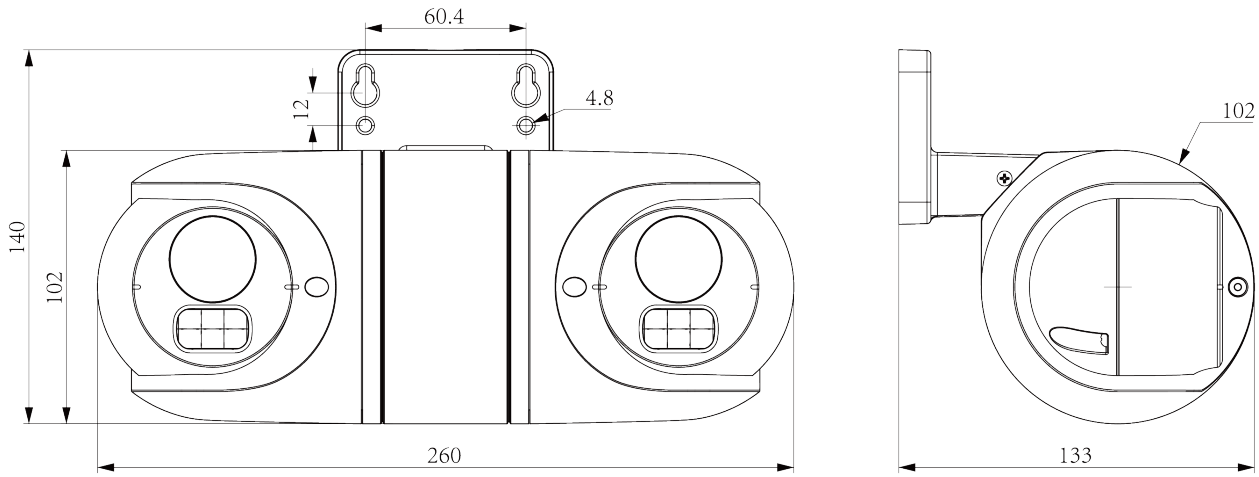
DIMENSIONS (Unit: mm)