Tiandy

# TC-C348V 4LHA-27135

Bullet Camera

LK

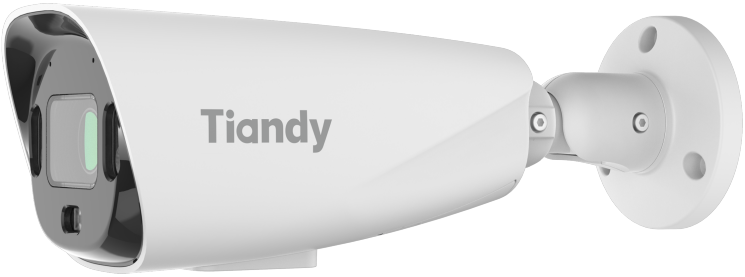


## KEY FEATURES

- Metal housing
- Up to 4MP,2688×1520@30fps
- S+265/H.265/H.264B/H.264M/H.264H/Motion JPEG
- Color:0.0005Lux @ (F1.3，AGC ON),B/W:0.0002Lux @(F1.3，AGC ON)，0Lux with IR
- IR range up to 80m
- 1×Built-in Mic, 1×Built-in Speaker
- Support microSD/microSDHC/microSDXC card,up to 1TB
- Support smart surveillance, face capture, support up to 32 face databases, max capacity of face template database: 10,000 captures
- Support human/vehicle/non-motor vehicle/pet(cat、dog) classification
- Operating conditions -35°C~65°C(-31°F~149°F), ≤95%RH
- DC12V±25%,Max. 17.5W, PoE:IEEE 802.3at,Max. 21.5W
- IP67, IK10

Tiandy Technologies Co.,Ltd Tiandy Overseas Tiandy @tiandyofficial

Tiandy Technologies Co.,Ltd.
Email: sales@tiandy.com Tel: +86-22-58596065
Website: en.tiandy.com Fax: +86-22-58596048

2026.03.20

Tiandy

## SPECIFICATIONS

| | |
|---|---|
| **Camera** | |
| Image Sensor | 1/1.8"CMOS |
| Min. Illumination | Color:0.0005Lux @ (F1.3，AGC ON),B/W:0.0002Lux @(F1.3，AGC ON)，0Lux with IR |
| Shutter Time | 1s~1/100000s |
| Day&Night | IR-cut filter with auto switch (ICR) |
| Smart IR | Yes |
| WDR | 130dB,True WDR(TWDR) |
| S/N | >56dB |
| Angle Adjustment | 0~360°(P); 0~90°(T); 0~360°(R) |
| **Lens** | |
| Lens Type | Motorized |
| Focal Length | 2.7~13.5mm |
| Lens Mount | Φ16 |
| Aperture Range | F1.3-F2.2 |
| Aperture Type | Auto(DC-Iris) |
| Field of View | 103.7~47.8°(H); 59.9~28.1°(V); 116~54°(D) |
| DORI Distance | Detect:41m~137m<br>Observe:16m~54m<br>Recognize:8m~27m<br>Identify:4m~14m |
| **Illuminator** | |
| IR LEDs | 4 |
| IR Distance | Up to 80m |
| Wavelength | 850nm |
| White LEDs | 4 |
| Whitelight Distance | 30m |
| Red and Blue Alarm Flash | Red and Blue Light |
| **Compression Standard** | |
| Video Compression | S+265/H.265/H.264B/H.264M/H.264H/Motion JPEG |
| Video Bit Rate | 32k~16Mbps |
| Audio Compression | G.711A/G.711U/ADPCM_D/AAC_LC |
| Audio Sampling Rate | 8kHz/32kHz/48kHz |
| **Image** | |
| Max. Resolution | 4MP,2688×1520@30fps |
| Main Stream | PAL:25fps(2688×1520, 2560×1440, 2304×1296)50fps(1920×1080, 1280×720)<br>NTSC:30fps(2688×1520, 2560×1440, 2304×1296)60fps(1920×1080, 1280×720) |
| Sub Stream | PAL:25fps(704×576, 704×288, 640×360, 352×288)<br>NTSC:30fps(704×480, 704×240, 640×360, 352×240) |

Tiandy

| | |
|---|---|
| Third Stream | PAL:25fps(1280x720,704x576,704x288,352x288, 640×480)<br>NTSC:30fps(1280x720,704x480,704x240,352x240, 640×480) |
| Fourth Stream | PAL:25fps(1280x720,704x576)<br>NTSC:30fps(1280x720,704x480) |
| Fifth Stream | PAL:25fps(704x576)<br>NTSC:30fps(704x480) |
| BLC | Yes |
| HLC | Yes |
| LDC | Yes |
| AGC | Yes |
| 3D DNR | Yes |
| White Balance | Auto/Semi-Auto/Manual/Sunshine/Nature Light/Warmlight Lamp/Daylight Lamp/Filament Lamp/Lock White Balance |
| ROI | 8 rectangular static areas |
| Corridor Mode | Yes |
| OSD | Overlay of additional characters in 5 regions,2 line, with a maximum of 127 characters or 42 Chinese characters per region; 16*16/24*24/32*32/48*48/64*64/96*96,Default Adaptive; Vector/Lattice |
| Picture Overlay | 1*200x200 size BMP 24 color bit image overlay |
| Privacy Mask | 4 black static areas |
| Defog | Yes |
| **Feature** | |
| AI ISP | Yes |
| General Alarm | Motion Detection; Mask Alarm; Alarm Input |
| Exceptions Alarm | Voltage Alarm; Disk Full; Disk R/W Error; IP Address Conflict; MAC Address Conflict; FTP Server Exception ; Network Disconnection; No Disk; Illegal Access |
| Linkage Method | Send Email; Trigger Sound; Trigger Recording; Trigger Capture; Notify Surveillance Center; Alarm Output; Trigger red and blue light ; Trigger smart light |
| Video Analytics | Human/Vehicle/Non-motor Vehicle/Pet(Cat、Dog) Classification; Tripwire; Double Tripwire; Perimeter; Object Abandon; Object Missing; Heatmap; Loitering; Running; Parking; People Counting; Crowed Detection; Safety Helmet Detection; On Duty Detection; Video Abnormal; Audio Abnormal |
| Rules of Behavior Analyse In 1 Scene | 8 |
| Early Warning(EW) | Early Warning(EW) |
| Face Detection Performance | Detect up to 32 faces at the same scene; Capture up to 16 faces at the same scene |
| False Rate of Face Capture | ≤1% |
| Face Duplicate Capture Rate | ≤20%（Continuous 10-person scene and below） |
| Mask Attribute Linkage Alarm | Mask Attribute Linkage Alarm |
| Face-Person Binding | Binding rate≥90%（Continuous 6-person scene and below） |
| Smart Event | Fire Exit Occupancy |
| Image Push Strategy | Image Push Strategy |

Tiandy

| | |
|---|---|
| Image Push Interval | Image Push Interval |
| Capture Mode | Capture Mode |
| Face Capture | Face Capture |
| Background Image Resolution | 2688×1520 |
| Background Image OSD Overlay | video streamOSD/customize |
| Human Capture Rate | ≥95%（Continuous 6-person scene and below） |
| Human False Capture Rate | ≤7%（Continuous 6-person scene and below） |
| Human Duplicate Capture Rate | ≤30%（Continuous 6-person scene and below） |
| Face Recognition | Support up to 32 face databases, max capacity of face template database: 10,000 captures; Support linkage output, capture, recording and audible & visual alarm upon successful face matching; Supports face library encryption |
| Face Recognition | Support up to 32 face databases, max capacity of face template database: 10,000 captures; Support linkage output, capture, recording and audible & visual alarm upon successful face matching; Supports face library encryption |
| Matching Speed | 0.3S/person |
| Face Recognition | Support up to 32 face databases, max capacity of face template database: 10,000 captures; Support linkage output, capture, recording and audible & visual alarm upon successful face matching; Supports face library encryption |
| Visible Light Smoke & Fire Detection | Visible Light Smoke & Fire Detection |
| **Network** | |
| ANR | Yes |
| Protocols | RTSP; RTMP; HTTP; HTTPS; TCP; UDP; UPnP; ICMP; IGMP; SNMP v1\v2\v3; DHCP; DNS; DDNS; Easy DDNS; NTP; SMTP; TLS v1.2; SSL; 802.1X; QoS; IPv4; IPv6; PPPoE; SSH; Unicast; Multicast; RTCP; ARP; SRTP; FTP; SFTP; NAS |
| System Compatibility | ONVIF(Profile S/T/G/M) ; SDK; CGI; Milestone |
| Remote Connection | Up to 7 channels |
| Client | Easy7 VMS |
| Mobile Client | EasyLive Plus |
| Web | IE10+; Firefox52+; Edge89+; Safari11+; Chrome57+ |
| **Interface** | |
| Communication Interface | 1×RJ-45 (10/100 Base-T) |
| Audio I/O | 1×input, two-core , max. input amplitude:3.3 Vpp, input impedance:1 KΩ, interface type:non-equilibrium; 1×output, two-core, max. output amplitude:3.3 Vpp, output impedance:100 Ω, interface type: non-equilibrium |
| Alarm I/O | 2×input,TTL,3mA,3.3VDC; 1×output,relay,1A,24VDC |
| Built-in Mic | 1×Built-in Mic |
| Built-in Speaker | 1×Built-in Speaker |
| Reset Button | Yes |
| On-board Storage | Support microSD/microSDHC/microSDXC card,up to 1TB |

Tiandy

| | |
|---|---|
| RTC | Yes |
| Additional Interfaces | RS-485 |
| **General** | |
| Web Client Language | 20 languages<br>Simple Chinese/Traditional Chinese/English/Spanish/Korean/Italian/Turkish/Russian/Thai/French/Polish/Dutch/Hebrew/Arabic/Vietnamese/German/Ukrainian/Portuguese/Albanian/Greek |
| Operating Temperature | -35°C~65°C(-31°F~149°F) |
| Operating Humidity | ≤95%RH |
| Storage Temperature | -40°C~65°C(-40°F~149°F) |
| Storage Humidity | 10%~95%RH(non-condensing) |
| Power Supply | DC12V±25%,Max. 17.5W; PoE:IEEE 802.3at,Max. 21.5W |
| Protection | Surge4000V; ESD6000V; IP67; IK10 |
| Boundary Dimensions | 282(L)105(W)95(H)mm |
| Package Dimensions | 360(L)150(W)175(H)mm |
| GrossWeight | 1.65kg |
| NetWeight | 1.37kg |

Tiandy

## DIMENSIONS (Unit: mm)

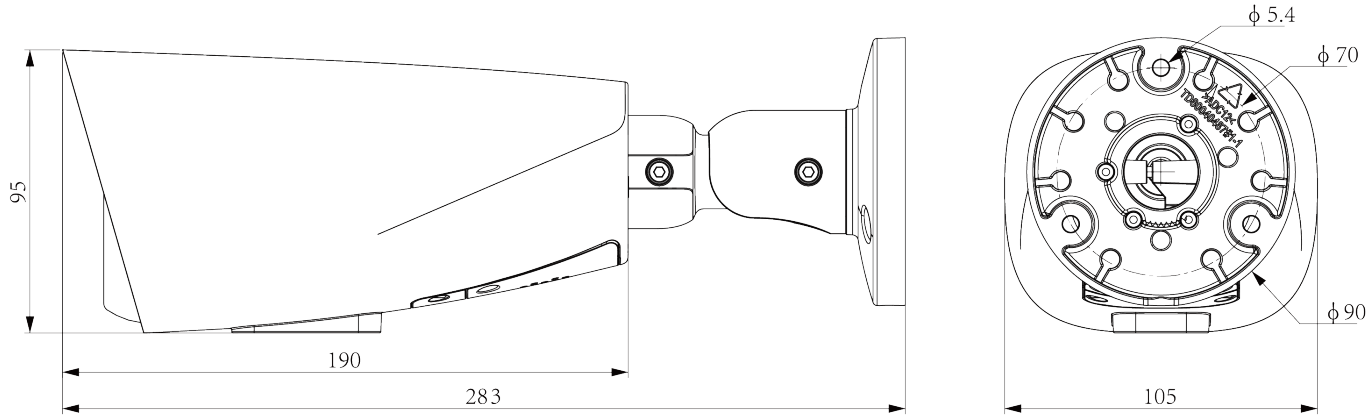

Tiandy

## Assembly diagram of Junction Box

TC-P54BM SPEC: V5
JUNCTION BOX

A36
POLE MOUNT