Tiandy

TC-C32XN 2ENA-28

Turret Camera

Spark Series

KEY FEATURES

- Metal+plastic housing
- Up to 2MP,1920×1080@30fps
- S+265/H.265/H.264B/H.264M/H.264H
- Color:0.02Lux@(F1.6,AGC ON),B/W:0Lux with IR
- IR range up to 30m
- 1×Built-in Mic
- Operating conditions -30°C~60°C(-22°F~140°F), ≤95%RH
- PoE:IEEE 802.3af,Max. 3W

Tiandy Technologies Co.,Ltd Tiandy Overseas Tiandy @tiandyofficial

Tiandy Technologies Co.,Ltd.
Email: sales@tiandy.com Tel: +86-22-58596065
Website: en.tiandy.com Fax: +86-22-58596048

2025.12.02

Tiandy

SPECIFICATIONS

Camera	
Image Sensor	1/3"CMOS
Min. Illumination	Color:0.02Lux@(F1.6,AGC ON),B/W:0Lux with IR
Shutter Time	1s~1/100000s
Day&Night	IR-cut filter with auto switch (ICR)
Smart IR	Yes
WDR	DWDR
S/N	>52dB
Angle Adjustment	0~340°(P); 0~75°(T); 0~360°(R)
Lens	
Lens Type	Fixed focal lens
Focal Length	2.8mm
Lens Mount	M12
Aperture Range	F1.6
Aperture Type	Fixed
Field of View	90.7°(H); 50.9°(V); 102.7°(D)
DORI Distance	Detect:40.0m Observe:15.9m Recognize:8.0m Identify:4.0m
Illuminator	
IR LEDs	2
IR Distance	Up to 30m
Wavelength	850nm
White LEDs	2
Whitelight Distance	Up to 15m
Compression Standard	
Video Compression	S+265/H.265/H.264B/H.264M/H.264H
Video Bit Rate	32k~4Mbps
Audio Compression	G.711A/G.711U
Audio Sampling Rate	8kHz
Image	
Max. Resolution	2MP,1920×1080@30fps
Main Stream	PAL:25fps(1920×1080, 1280×720) NTSC:30fps(1920×1080, 1280×720)
Sub Stream	PAL:25fps(704×576, 704×288, 640×360, 352×288) NTSC:30fps(704×480, 704×240, 640×360, 352×240)
BLC	Yes

Tiandy

HLC	Yes
AGC	Yes
3D DNR	Yes
White Balance	Auto/Semi-Auto/Manual/Sunshine/Nature Light/Warmlight Lamp/Daylight Lamp/Filament Lamp/Lock White Balance
OSD	Overlay of additional characters in 1 regions, 1 line, with a maximum of 48 characters; 16*16/32*32/48*48; Lattice
Privacy Mask	4 black static areas
Defog	Yes
Feature	
General Alarm	Smart Alarm(human and vehicle detection)
Exceptions Alarm	IP Address Conflict
Linkage Method	Trigger Capture
Network	
Protocols	RTSP; HTTP; TCP; UDP; ICMP; DHCP; DNS; NTP; IPv4; SSH; Unicast
System Compatibility	P2P(Mutually exclusive with Onvif); ONVIF(Profile S/T) ; SDK; CGI; Milestone
Remote Connection	≤2
Client	Easy7 VMS
Mobile Client	EasyLive Plus
Web	IE10+; Firefox52+; Edge89+; Safari11+; Chrome57+
Interface	
Communication Interface	1×RJ-45 (10/100 Base-T)
Built-in Mic	1×Built-in Mic
General	
Web Client Language	12 languages English/Spanish/Italian/Turkish/Russian/Thai/French/Polish/Arabic/Vietnamese/Portuguese/Japanese
Operating Temperature	-30°C~60°C(-22°F~140°F)
Operating Humidity	≤95%RH
Storage Temperature	-30°C~60°C(-22°F~140°F)
Storage Humidity	10%~95%RH(non-condensing)
Power Supply	PoE:IEEE 802.3af,Max. 3W
Protection	Surge4000V; ESD6000V
Boundary Dimensions	117(L)117(W)96(H)mm
Package Dimensions	140(L)140(W)120(H)mm
GrossWeight	0.34kg

Tiandy

DIMENSIONS (Unit: mm)

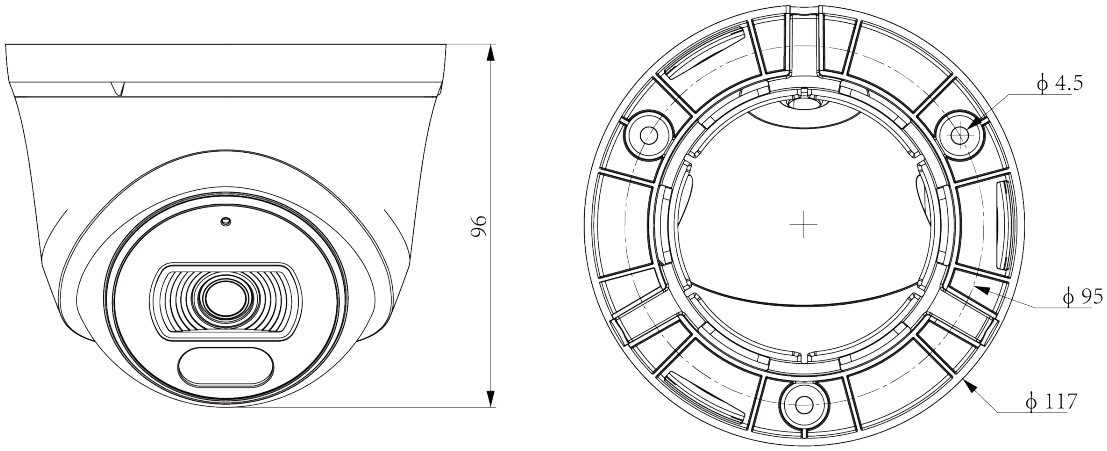

Tiandy

Assembly diagram of Junction Box

TC-P54BM Spec:V5

A36