Tiandy

TC-H354S Spec:23X/I/E/V3.1

5MP 23X IR PTZ Camera

Pro Series

KEY FEATURES

- Up to 5MP,2880×1620@30fps
- Color:0.001lux@ (F1.6,AGC ON),B/W:0lux with IR
- S+265/H.265/H.264B/H.264M/H.264H/Motion JPEG
- Optical zoom 23X
- IR range up to 150m
- Support microSD/microSDHC/microSDXC card,up to 512GB
- Support smart surveillance, detect up to 32 faces at the same scene
- Support human/vehicle classification
- Operating conditions -30°C~65°C(-22°F~149°F), ≤95%RH
- DC12V±10%, PoE:IEEE 802.3at
- IP66

Tiandy Technologies Co.,Ltd Tiandy Overseas Tiandy @tiandyofficial

Tiandy Technologies Co.,Ltd.
Email: sales@tiandy.com Tel: +86-22-58596065
Website: en.tiandy.com Fax: +86-22-58596048

2025.06.05

Tiandy

SPECIFICATIONS

Camera	
Image Sensor	1/2.7"CMOS
Min. Illumination	Color:0.001lux@ (F1.6,AGC ON),B/W:0lux with IR
Shutter Time	1s~1/100000s
Day&Night	IR-cut filter with auto switch (ICR)
Smart IR	Yes
WDR	120dB
S/N	39dB
Lens	
Focal Length	5mm~115mm
Optical Zoom	23X
Digital Zoom	16X
Zoom Speed	<5s
Aperture Range	F1.67~F3.67
Aperture Type	Auto(P-Iris)
Field of View	58°~3.2°(H); 33.9°~1.9°(V); 64.8°~3.6°(D)
Focus Control	Auto/Semi-auto/Manual
Close Focus Distance	500mm~5000mm
DORI Distance	Detect:1980m Observe:785m Recognize:396m Identify:198m
Pan&Tilt	
Pan Range	0~360°(P)
Pan Speed	Manual Speed:0.1°～80°/s Preset Speed:80°/s
Tilt Range	-16°~90°(T) (Default -3°~90°(T))
Tilt Speed	Manual Speed:0.1°～80°/s Preset:80°/s
3D Position	Yes
Preset	500
Cruise	16(up to 32 presets per cruise)
Scan	8
Pattern	8,each with 600s memory or 1000 orders
Scheduled Task	Preset,Cruise,Scan,Pattern
North Point	Yes(Manual setting)
Power-off Memory	Yes
Illuminator	

Tiandy

IR LEDs	7
IR Distance	Up to 150m
Wavelength	850nm
IR Irradiation Angle	Yes
Compression Standard	
Video Compression	S+265/H.265/H.264B/H.264M/H.264H/Motion JPEG
Video Bit Rate	32Kbps~16Mbps
Audio Compression	G.711A/G.711U/ADPCM_D/AAC_LC
Audio Sampling Rate	8kHz/32kHz/48kHz
Image	
Max. Resolution	5MP,2880×1620@30fps
Main Stream	PAL:25fps(2880×1620,2688×1520,2560×1440,2304×1296,1920×1080,1280×720) NTSC:30fps(2880×1620,2688×1520,2560×1440,2304×1296,1920×1080,1280×720)
Sub Stream	PAL:25fps(704×576,704×288,640×360,352×288) NTSC:30fps(704×480,704×240,640×360,352×240)
Third Stream	PAL:25fps(704×576,704×288,352×288,640×480) NTSC:30fps(704×480,704×240,352×240,640×480)
BLC	Yes
HLC	Yes
AGC	Yes
3DNR	Yes
White Balance	Auto/Semi-Auto/Manual/Sunshine/Nature Light/Warmlight Lamp/Daylight Lamp/Filament Lamp/Lock White Balance
ROI	7 Dynamic Areas for Both Main and Sub Stream
OSD	5 regions(Each region can have a maximum of 127 characters ,up to 5 lines); 16*16/24*24/32*32/48*48/64*64/96*96/adaptable size; Vector/Lattice
Defog	Yes
Flip	Normal/Horizontal Mirror/Vertical Mirror/Inverted Flip
Regional Exposure	Yes
Regional Focus	Yes
Demist	Yes
Privacy Mask	24 regions(Up to 4 blocks in the same scene)
Feature	
General Alarm	Motion Detection; Mask Alarm; Alarm Input
Exceptions Alarm	Voltage Alarm; Disk Full; Disk R/W Error; Recording Exception; IP Address Conflict; MAC Address Conflict; FTP Server Exception ; Network cable disconnected
Linkage Method	Send Email; Trigger Sound; Trigger Recording; Trigger Capture; Notify Surveillance Center; Alarm Output

Tiandy

Video Analytics	Human/Vehicle Classification; Tripwire; Double Tripwire; Perimeter; Object Abandon; Object Missing; Heatmap; Loitering; Running; Parking; People Counting; Safety Helmet Detection; On Duty Detection; Video Abnormal; Audio Abnormal; Crowed Detection
Face Mode	Face Capture
Face Capture Performance	60; 19; ≤60m; Detect up to 32 faces at the same scene; Capture up to 16 faces at the same scene; Capture rate ≥99%(continuous scene with 10 people or less); Gender 85%,age (±5) 85%,mask 90%,glasses 85%,beard 80% (Less than 10 people in view)
Network	
ANR	Yes
Protocols	RTSP; RTMP; HTTP; HTTPS; TCP/IP; UDP; UPnP; ICMP; IGMP; SNMP v1\v2\v3; DHCP; DNS; DDNS; Easy DDNS; NTP; SMTP; TLS v1.2; SSL; 802.1x; QoS; IPv4; IPv6; PPPoE; SSH; Unicast; Multicast; ARP; RTP; SRTP; FTP; SFTP
System Compatibility	P2P; ONVIF(Profile S/T/G/M); SDK; CGI; Milestone; RTSP; RTMP; HTTP PUSH
Remote Connection	≤7
User/Host	32users, Level 4:Admin/Browse/Browse+Control/Browse+Control+Set
Client	Easy7 VMS
Moblie Client	EasyLive Plus
Web	IE10+; Firefox52+; Edge89+; Safari11+; Chrome57+
Interface	
Communication Interface	1*RJ45 (10/100Base-T)
Audio I/O	1*Input Impedance 1kΩ,2.0~2.4Vp-p; 1*Output Impedance 600Ω
Alarm I/O	1*Switching; 1*Switching,Voltage≤DC24V,Current≤1A
Reset Button	Yes
On-board Storage	Support microSD/microSDHC/microSDXC card,up to 512GB
General	
Web Client Language	19 languages Simple Chinese/English/Traditional Chinese/Spanish/Italian/ Korean/Turkish/Russian/Thai/ Polish/ French/Dutch/ Hebraism/Vietnamese/Arabic/German/ Ukrainian /Portuguese/Albanian
Operating Temperature	-30°C~65°C(-22°F~149°F)
Operating Humidity	≤95%RH
Storage Temperature	-30°C~65°C(-22°F~149°F)
Storage Humidity	10%~95%RH(non-condensing)
Power Supply	DC12V±10%; PoE:IEEE 802.3at
Power Consumption	8.1W(IR OFF) ; 19.4W(IR ON)
Protection	Surge4000V; ESD6000V; IP66
Material	Metal+plastic
Boundary Dimensions	161(D)276(H)mm
Package Dimensions	260(L)260(W)465(H)mm
GrossWeight	3.9kg

Tiandy

NetWeight	2.2kg

DIMENSIONS (Unit: mm)

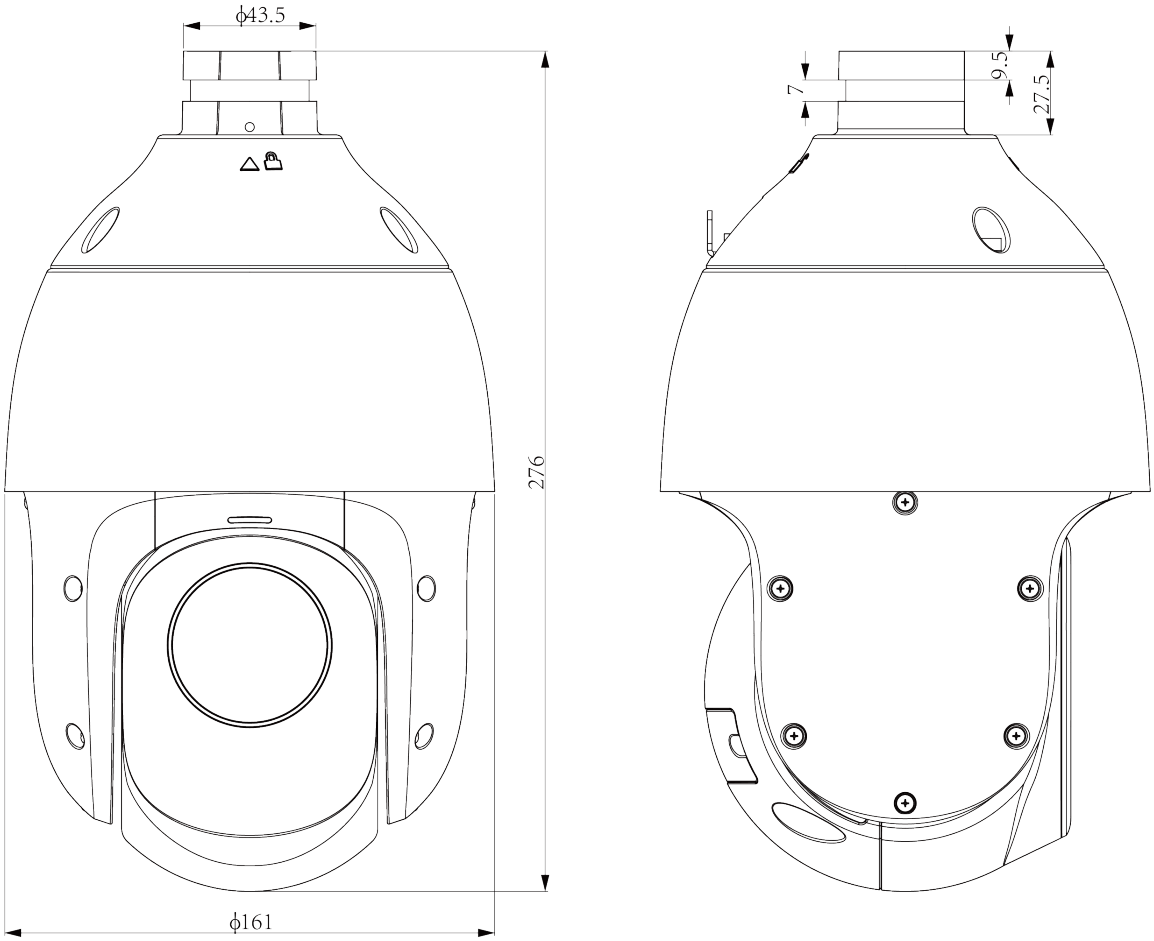

Tiandy

Assembly diagram of Junction Box