Tiandy

TC-H324S 323IA

PTZ Camera

Pro Series

KEY FEATURES

- Up to 2MP,1920×1080@30fps
- Color:0.001lux@ (F1.5,AGC ON),B/W:0lux with IR
- S+265/H.265/H.264B/H.264M/H.264H/Motion JPEG
- Optical zoom 23X
- IR range up to 150m
- Support microSD/microSDHC/microSDXC card,up to 512GB
- Support smart surveillance
- Support human/vehicle classification
- Operating conditions -30°C~65°C(-22°F~149°F), ≤95%RH
- DC12V±10%, PoE:IEEE 802.3at
- IP66

Tiandy Technologies Co.,Ltd Tiandy Overseas Tiandy @tiandyofficial

Tiandy Technologies Co.,Ltd.
Email: sales@tiandy.com Tel: +86-22-58596065
Website: en.tiandy.com Fax: +86-22-58596048

2025.12.22

Tiandy

SPECIFICATIONS

Camera	
Image Sensor	1/2.8"CMOS
Min. Illumination	Color:0.001lux@ (F1.5,AGC ON),B/W:0lux with IR
Shutter Time	1s~1/100000s
Day&Night	IR-cut filter with auto switch (ICR)
Smart IR	Yes
WDR	120dB
S/N	56dB
Lens	
Focal Length	5mm~115mm
Optical Zoom	23X
Zoom Speed	<5s
Aperture Range	F1.5~F3.0
Aperture Type	Auto(P-Iris)
Field of View	55.8°~3.2°(H); 32.2°~1.8°(V); 61°~3.64°(D)
Focus Control	Auto/Semi-auto/Manual
Close Focus Distance	1000mm~1500mm
DORI Distance	Detect:1351m Observe:536m Recognize:270m Identify:135m
Pan&Tilt	
Pan Range	0~360°(P)
Pan Speed	Manual Speed:0.1°～80°/s Preset Speed:80°/s
Tilt Range	-16°~90°(T) (Default -3°~90°(T))
Tilt Speed	Manual Speed:0.1°～80°/s Preset:80°/s
3D Position	Yes
Preset	500
Cruise	16(up to 32 presets per cruise)
Scan	8
Pattern	8,each with 600s memory or 1000 orders
Scheduled Task	Preset,Cruise,Scan,Pattern
North Point	Yes(Manual setting)
Power-off Memory	Yes
Illuminator	
IR LEDs	7

Tiandy

IR Distance	Up to 150m
Wavelength	850nm
IR Irradiation Angle	Yes
Compression Standard	
Video Compression	S+265/H.265/H.264B/H.264M/H.264H/Motion JPEG
Video Bit Rate	32Kbps~16Mbps
Audio Compression	G.711A/G.711U/ADPCM_D/AAC_LC
Audio Sampling Rate	8kHz/32kHz/48kHz
Image	
Max. Resolution	2MP,1920×1080@30fps
Main Stream	PAL:25fps(1920×1080,1280×720,640×480,704×576) NTSC:30fps(1920×1080,1280×720,640×480,704×480)
Sub Stream	PAL:25fps(704×576,704×288,640×360,352×288) NTSC:30fps(704×480,704×240,640×360,352×240)
Third Stream	PAL:25fps(352×288) NTSC:30fps(352×240)
BLC	Yes
HLC	Yes
AGC	Yes
3DNR	Yes
White Balance	Auto/Semi-Auto/Manual/Sunshine/Nature Light/Warmlight Lamp/Daylight Lamp/Filament Lamp/Lock White Balance
ROI	7 Dynamic Areas for Both Main and Sub Stream
OSD	5 regions(Each region can have a maximum of 127 characters ,up to 1 line); 16*16/24*24/32*32/48*48/64*64/adaptable size; Vector/Lattice
Defog	Yes
Flip	Normal/Horizontal Mirror/Vertical Mirror/Inverted Flip
Regional Exposure	Yes
Regional Focus	Yes
Demist	Yes
Feature	
General Alarm	Motion Detection; Mask Alarm; Alarm Input
Exceptions Alarm	Voltage Alarm; Disk Full; Disk R/W Error; Recording Exception; IP Address Conflict; MAC Address Conflict; FTP Server Exception ; Network cable disconnected
Linkage Method	Send Email; Trigger Sound; Trigger Recording; Trigger Capture; Notify Surveillance Center; Alarm Output
Video Analytics	Human/Vehicle Classification; Tripwire; Double Tripwire; Perimeter; Object Abandon; Object Missing; Heatmap; Video Abnormal; Audio Abnormal
Network	
ANR	Yes

Tiandy

Protocols	RTSP; RTMP; HTTP; HTTPS; TCP/IP; UDP; UPnP; ICMP; IGMP; SNMP v1\v2\v3; DHCP; DNS; DDNS; Easy DDNS; NTP; SMTP; TLS v1.2; SSL; 802.1x; QoS; IPv4; IPv6; PPPoE; SSH; Unicast; Multicast; ARP; RTP; SRTP; FTP; SFTP
System Compatibility	P2P; ONVIF(Profile S/T/G/M); SDK; CGI; Milestone; RTSP; RTMP; HTTP PUSH
Remote Connection	≤2
User/Host	32users, Level 4:Admin/Browse/Browse+Control/Browse+Control+Set
Client	Easy7 VMS
Mobile Client	EasyLive Plus
Web	IE10+; Edge89+; Safari11+; Chrome57+
Interface	
Communication Interface	1*RJ45 (10/100Base-T)
Audio I/O	1*Input Impedance 1kΩ,2.0~2.4Vp-p; 1*Output Impedance 600Ω
Alarm I/O	1*Switching; 1*Switching,Voltage≤DC24V,Current≤1A
Reset Button	Yes
On-board Storage	Support microSD/microSDHC/microSDXC card,up to 512GB
General	
Web Client Language	19 languages Simple Chinese/English/Traditional Chinese/Spanish/Italian/ Korean/Turkish/Russian/Thai/ Polish/ French/Dutch/ Hebraism/Vietnamese/Arabic/German/ Ukrainian /Portuguese/Albanian
Operating Temperature	-30°C~65°C(-22°F~149°F)
Operating Humidity	≤95%RH
Storage Temperature	-30°C~65°C(-22°F~149°F)
Storage Humidity	10%~95%RH(non-condensing)
Power Supply	DC12V±10%; PoE:IEEE 802.3at
Power Consumption	7.15W(IR OFF) ; 18.5W(IR ON)
Protection	Surge4000V; ESD6000V; IP66
Material	Metal+plastic
Boundary Dimensions	161(D)276(H)mm
Package Dimensions	260(L)260(W)465(H)mm
GrossWeight	3.8kg
NetWeight	2.1kg

Tiandy

DIMENSIONS (Unit: mm)

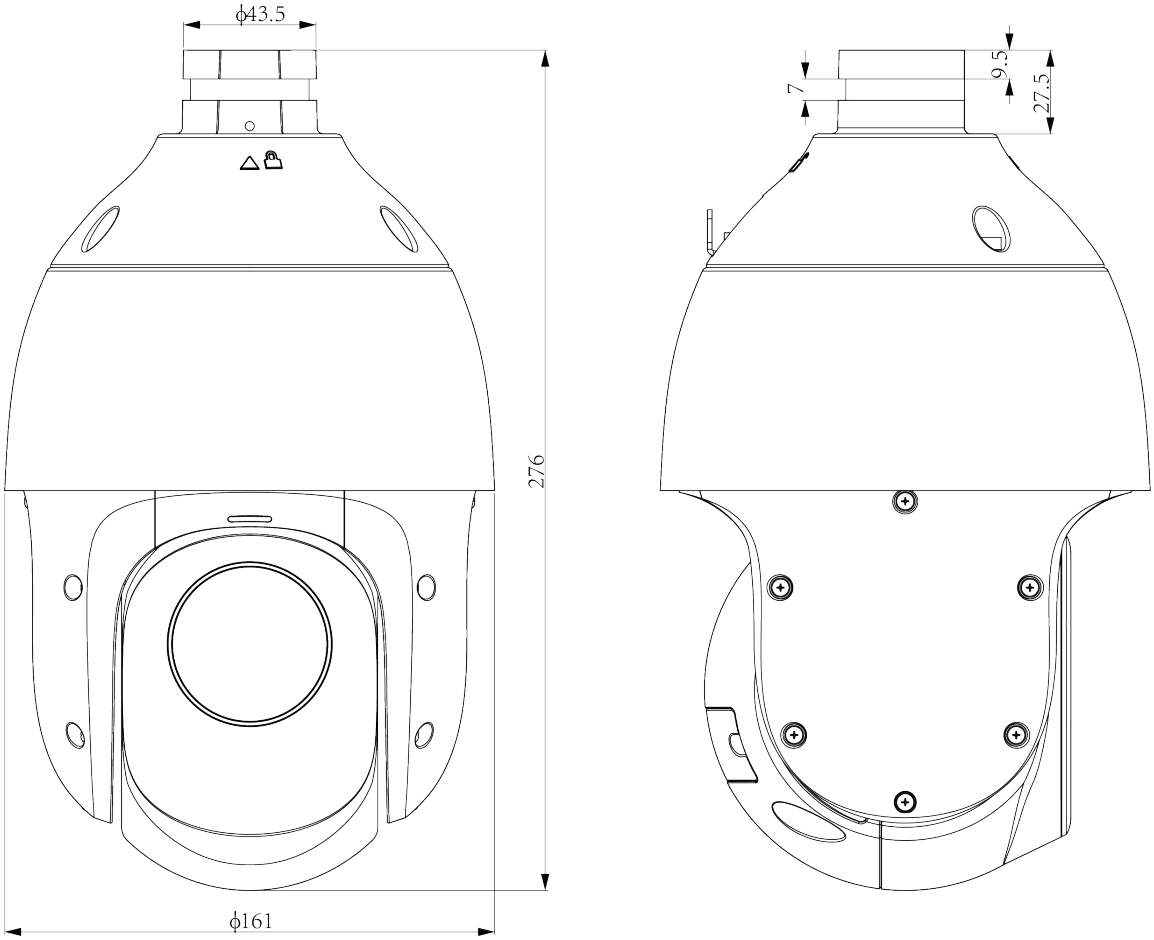

Tiandy

Assembly diagram of Junction Box