Tiandy

TC-C38UV 2FTA-28

Bullet Camera

SK Series

KEY FEATURES

- Metal+plastic housing
- Up to 8MP,3840x2160@20fps
- S+2.0/S+265/H.265/H.264B/H.264M/H.264H
- Color:0.0001Lux@(F1.0,AGC ON)
- 1×Built-in Mic
- Support microSD/microSDHC/microSDXC card,up to 512GB
- Operating conditions -30°C~60°C(-22°F~140°F), ≤95%RH
- DC12V±25%,Max. 8W, PoE:IEEE 802.3af,Max. 8.5W
- IP67

Tiandy Technologies Co.,Ltd
Tiandy Overseas
Tiandy
@tiandyofficial

Tiandy Technologies Co.,Ltd.
Email: sales@tiandy.com
Tel: +86-22-58596065
Website: en.tiandy.com
Fax: +86-22-58596048

2026.8.17

Tiandy

SPECIFICATIONS

Camera	
Image Sensor	1/1.8"CMOS
Min. Illumination	Color:0.0001Lux@(F1.0,AGC ON)
Shutter Time	1s~1/100000s
WDR	TWDR
S/N	>52dB
Angle Adjustment	0~360°(P); 0~80°(T); 0~360°(R)
Lens	
Lens Type	Fixed focal lens
Focal Length	2.8mm
Lens Mount	M16
Aperture Range	F1.0
Aperture Type	Fixed
Field of View	103.7°(H); 59.8°(V); 115.8°(D)
DORI Distance	Detect:56m Observe:22m Recognize:11m Identify:5.5m
Illuminator	
White LEDs	4
Whitelight Distance	Up to 15m
Compression Standard	
Video Compression	S+2.0/S+265/H.265/H.264B/H.264M/H.264H
Video Bit Rate	32k~6Mbps
Audio Compression	G.711A/G.711U
Audio Sampling Rate	8kHz
Image	
Max. Resolution	8MP,3840x2160@20fps
Main Stream	PAL:20fps(3840x2160, 3200×1800, 2560x1440, 2304x1296, 1920x1080, 1280x720) NTSC:20fps(3840x2160, 3200×1800, 2560x1440, 2304x1296, 1920x1080, 1280x720)
Sub Stream	PAL:20fps(704x576, 704x288, 352x288, 640x360) NTSC:20fps(704x480, 704x240, 352x240, 640x360)
BLC	Yes
HLC	Yes
AGC	Yes
3D DNR	Yes
White Balance	Auto/Semi-Auto/Manual/Sunshine/Nature Light/Warmlight Lamp/Daylight Lamp/Filament Lamp/Lock White Balance

Tiandy

OSD	Overlay of additional characters in 1 regions, 1 line, with a maximum of 48 characters; 16*16/32*32/48*48/64*64/96*96; Lattice
Privacy Mask	4 black static areas
Defog	Yes
Feature	
AI ISP	Yes
General Alarm	Smart Alarm(human and vehicle detection)
Exceptions Alarm	Disk Full; Disk R/W Error; IP Address Conflict
Linkage Method	Trigger Recording; Trigger Capture
Network	
ANR	ANR
Protocols	RTSP; HTTP; TCP; UDP; ICMP; DHCP; DNS; NTP; TLS v1.2; IPv4; SSH; Unicast
System Compatibility	P2P(Mutually exclusive with Onvif); ONVIF(Profile S/T/G) ; SDK; CGI; Milestone
Remote Connection	≤2
Client	Easy7 VMS
Mobile Client	EasyLive Plus
Web	IE10+; Firefox52+; Edge89+; Safari11+; Chrome57+
Interface	
Communication Interface	1×RJ-45 (10/100 Base-T)
Built-in Mic	1×Built-in Mic
Reset Button	Reset Button
On-board Storage	Support microSD/microSDHC/microSDXC card,up to 512GB
General	
Web Client Language	12 languages English/Spanish/Italian/Turkish/Russian/Thai/French/Polish/Arabic/Vietnamese/Portuguese/Japanese
Operating Temperature	-30°C~60°C(-22°F~140°F)
Operating Humidity	≤95%RH
Storage Temperature	-30°C~60°C(-22°F~140°F)
Storage Humidity	0%~95%RH(non-condensing)
Power Supply	DC12V±25%,Max. 8W; PoE:IEEE 802.3af,Max. 8.5W
Protection	Surge4000V; ESD6000V; IP67
Boundary Dimensions	204(L)84(W)76(H)mm
Package Dimensions	215(L)95(W)120(H)mm
GrossWeight	0.55kg
NetWeight	0.39kg

Tiandy

DIMENSIONS (Unit: mm)

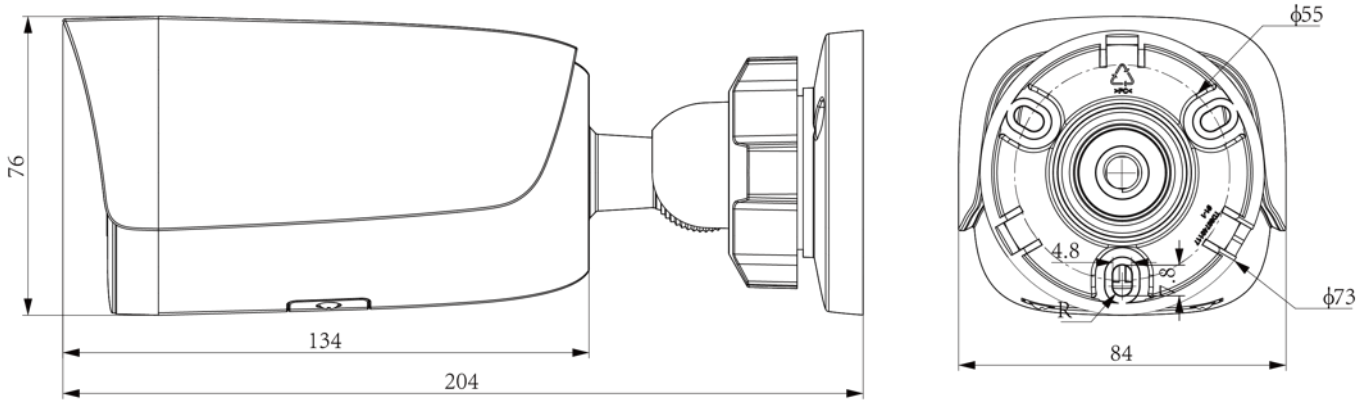

Tiandy

Assembly diagram of Junction Box

TC-P54BM Spec:V5

A36